EMBRACE + LED

Double-sided collapsible counter with aluminium frame for dressing with visual textile. Backlit graphics boost your brand messaging.

Description:

- LED back lighting kits can be attached on to the scissorsto illuminate the front.
- This system comes with the appropriate channel bars for a double sided display
- Tool-free
- Angled channel bars so that there are minimal shadows

Attach graphic into SEG channel

Internal LED lighting

Disclaimer: We are continually improving and modifying our product range and reserve the right to vary the specifications without prior notice. All dimensions and weights quoted are approximate

User Instruction

EMBRACE + LED

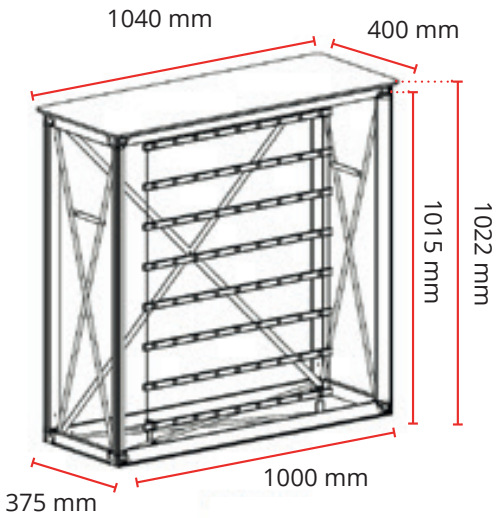

Includes an additional bag containing the LED curtain, the framing and the transformer

LED lights:

- Consists of 8 ledstrip (each with 9 LED bulbs)
- Transformer: max power 90W

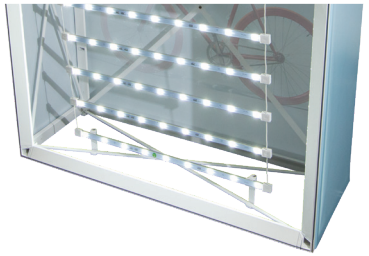

Hardware:

Code	Name	Hardware Dimensions with table top (h x w x d mm)	Hardware Dimensions without table top (h x w x d mm)	Weight with table top	Weight with bag	Parcel dimensions (h x w x d mm)	Weight
EMB-PL-CNTR-LED	Lada Embrace + LED	1022 x 1040 x 400	1015 x 1000 x 375	11 kg	15 kg	190 x 1175 x 470	16,2 kg

Dimensions folded structure: 85 (h) x 1055 (w) x 110 (d) mm

Tablet dimensions only: 13 (h) x 1040 (w) x 400 (d) / Weight : 3,8 kg

Disclaimer: We are continually improving and modifying our product range and reserve the right to vary the specifications without prior notice. All dimensions and weights quoted are approximate

EMBRACE + LED

Assembly

1

2

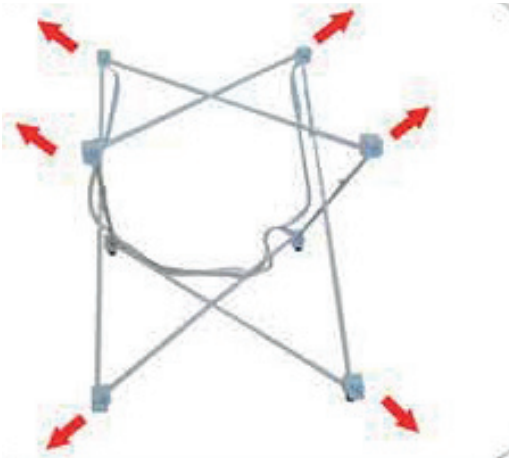

3

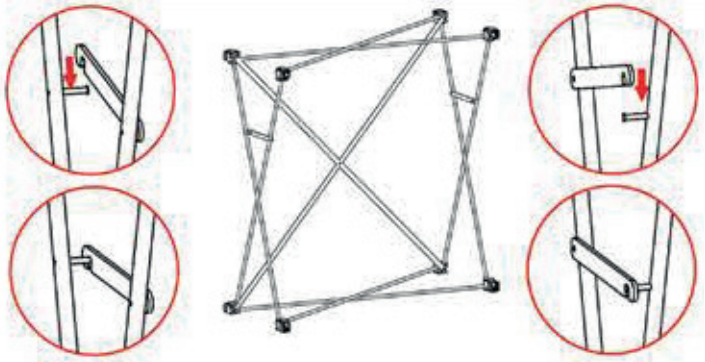

4

5

6

Disclaimer: We are continually improving and modifying our product range and reserve the right to vary the specifications without prior notice. All dimensions and weights quoted are approximate

EMBRACE + LED

7

8

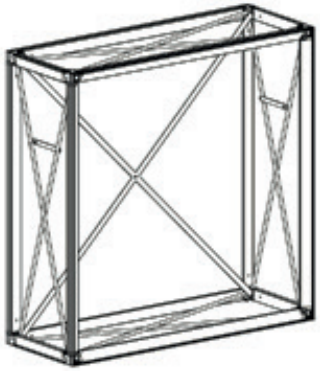

9

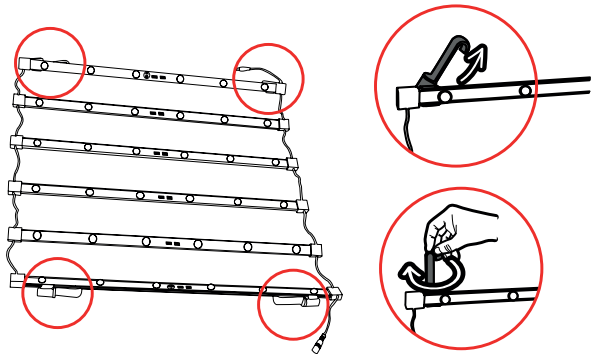

10 Place the LED curtain at the front of the counter

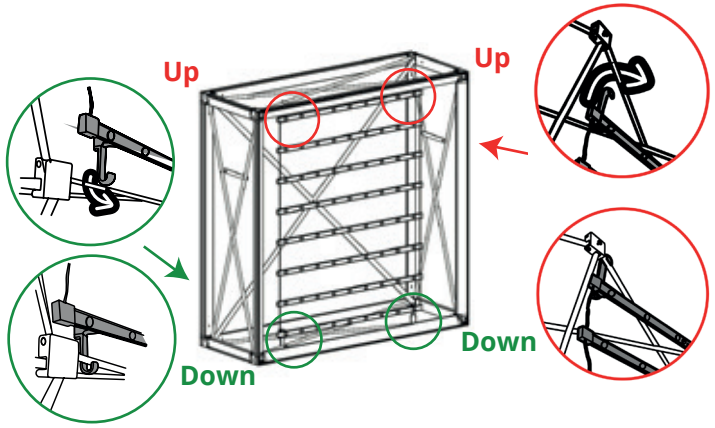

11a Insert the fabric graphic in the grooves on the frame

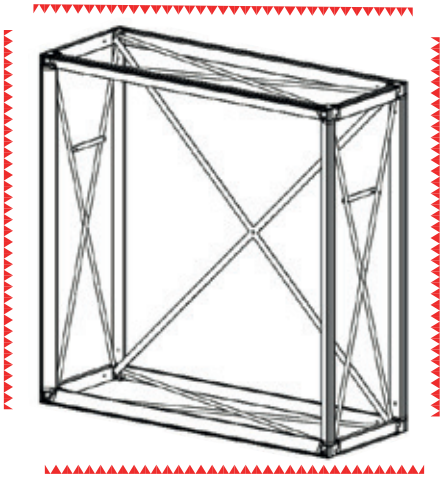

Disclaimer: We are continually improving and modifying our product range and reserve the right to vary the specifications without prior notice. All dimensions and weights quoted are approximate

EMBRACE + LED

11b

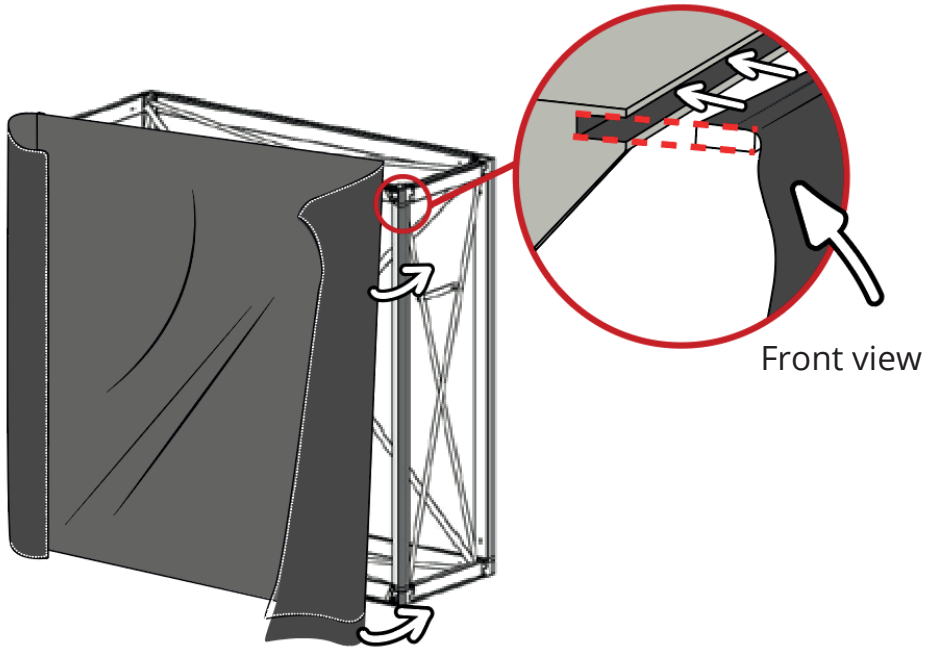

11c

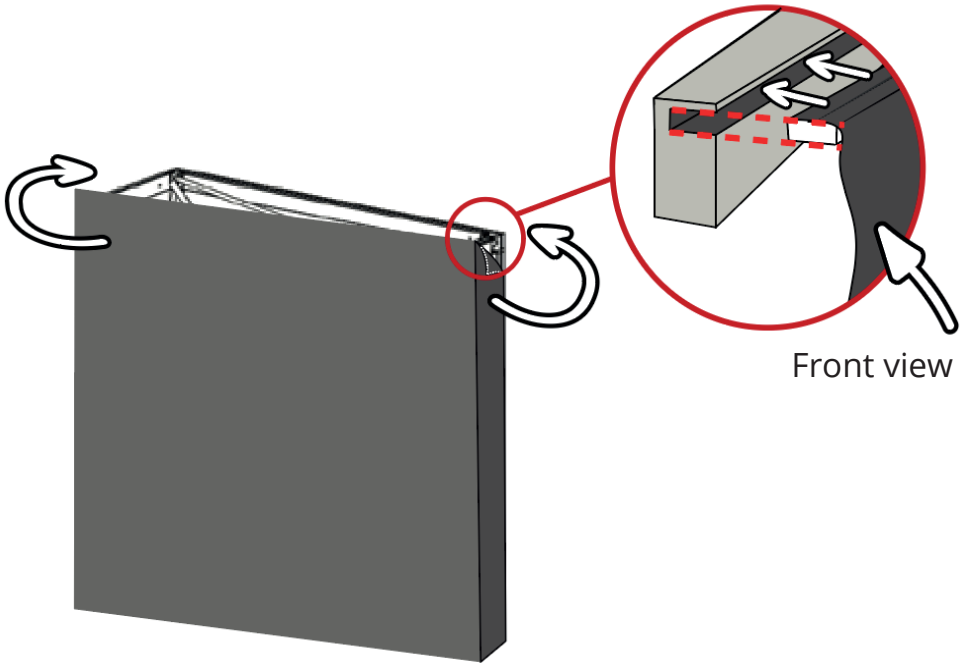

Disclaimer: We are continually improving and modifying our product range and reserve the right to vary the specifications without prior notice. All dimensions and weights quoted are approximate

EMBRACE + LED

12 Position the table top on the pins of the structure.
Connect the LED curtain to the transformer.

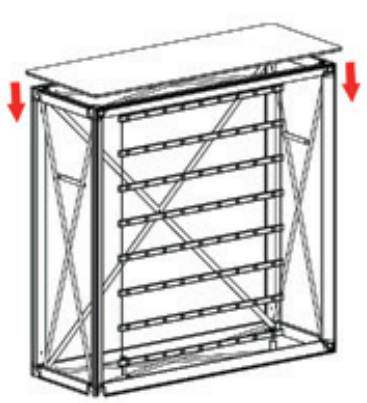

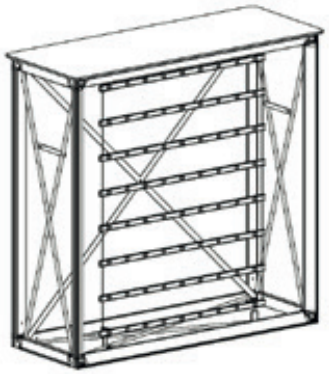

WORNING

Make sure all connections are properly made before turning on the device. Misuse could damage the LEDs.

Disclaimer: We are continually improving and modifying our product range and reserve the right to vary the specifications without prior notice. All dimensions and weights quoted are approximate